ELECTRONICS & NOISE

Summary

In this chapter the origin of the electrical selfnoise of a Microflown and how a preamplifier of a Microflown can be designed will be explained. The chapter consists on four parts. Because the Microflown has a resistive output, this chapter starts with basic theory on how to measure a resistance and what noise levels can be expected. In the second part three preamplifiers will be discussed. The Gadget, a simple circuit for laboratory use, the CE Gadget, designed for battery operated equipment and at last a two-wire system will be explained that is designed for a standard current powering protocol. In the third a measured set of parameters of a Microflown is presented. These parameters can be used for signal and noise calculations. The last part of this chapter noise quantification methods are discussed.

Introduction

The Microflown is an acoustic sensor based on a thermal principle. It consists of two very thin platinum wires that are heated by an electrical current. How the Microflown operates is explained in chapter 2 and in more detail in chapter A1 *"Model of the Microflown"*. In short: particle velocity will cause one sensor wire to drop *more* in temperature than the other. So, there is a differential and a common temperature variation. The differential temperature variation is linear dependent on the particle velocity and the common temperature drop contains information as well that can be used for flow measuring purposes, see chapter E3 *"DC flowsensor"*. The resistance of the platinum wires varies linearly with temperature and therefore the preamplifier should convert differential resistance variations and it should additionally suppress the common resistance variations.

The Microflown's sensor temperatures, their sum and difference are illustrated in Fig 4.1. The figure shows the influence of a particle velocity wave on the temperature of both sensors. The upper curve represents the

particle velocity signal. The next two curves below represent the measured temperatures of the two sensors. As can be seen, the differential temperature of both sensors, i.e. the output of the Microflown, looks similar to the upper curve. The common signal indicates that both sensors (i.e. the complete device) cool down when submitted to an acoustic disturbance.

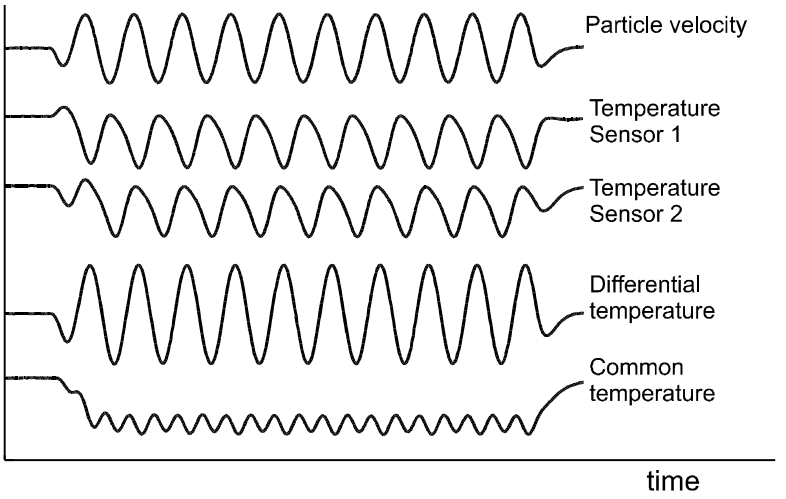

Fig. 4.1: Measured temperatures of the Microflown due to a high level acoustic disturbance.

The resistance of the two temperature sensors of the Microflown vary due to temperature variations. The output of the Microflown, which is linearly proportional to the particle velocity, is a differential resistance variation caused by the temperature difference of the two temperature sensors.

The preamplifier for the Microflown has to fulfil two needs: it has to power the Microflown (to heat the sensors) and it should convert only the differential resistance variation into an appropriate output signal.

Measuring resistance

The value of a resistance (R) is defined by the ratio of the voltage (U) over the resistor and the electrical current (I) through it: $R=U/I$. In this

case, the resistance of the Microflown has to be measured. Due to the varying sound field the sensor resistance will vary in time.

The measurement of this resistance can be accomplished in two ways. One approach is applying a constant voltage over the sensor and measuring the (varying) current. The second way is applying a constant current and measuring the (varying) voltage over the resistor, see Fig. 4.2. The latter method is used to discuss concepts like signal, noise and signal to noise ratio (S/N).

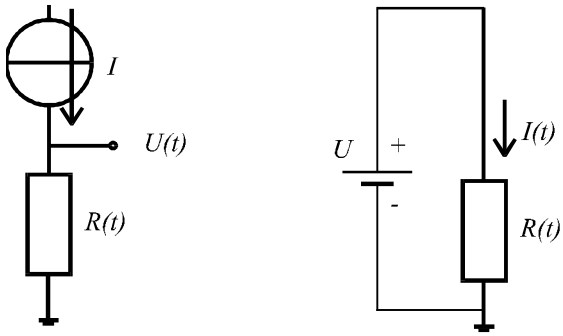

Fig. 4.2: Two ways to measure a resistance.

The variation of the resistor is denoted as ΔR, the non-varying part as R, which yields:

$$R(t) = R + \Delta R = R \cdot \left(1 + \frac{\Delta R}{R}\right) \tag{4.28}$$

Where $\Delta R/R$ is the relative resistance variation. If the resistor is fed with a constant current, the output voltage can be written as:

$$U(t) = IR(t) = IR + I\Delta R = U + \Delta U \tag{4.29}$$

For measuring the sound waves, only the varying part is of interest. Therefore the signal is defined as:

$$\Delta U = I\Delta R = IR \cdot \frac{\Delta R}{R} \tag{4.30}$$

Due to the presence of noise it is impossible to measure a resistance value with an infinite accuracy. Although 1/f noise is also present, only

thermal noise will be discussed here. The thermal noise of a resistor is defined as:

$$\delta u = \sqrt{4k \cdot T \cdot R \cdot Bw} \tag{4.31}$$

Using k as Bolzmann's constant. The signal to noise ratio quantifies how accurate the resistance can be measured:

$$\frac{S}{N} = \frac{\Delta U}{\delta u} = \frac{IR\frac{\Delta R}{R}}{\sqrt{4k \cdot T \cdot R \cdot Bw}} = \frac{I\sqrt{R}\frac{\Delta R}{R}}{\sqrt{4k \cdot T \cdot Bw}} = \frac{1}{\sqrt{4k}} \cdot \frac{1}{\sqrt{Bw}} \cdot \sqrt{\frac{P}{T}} \cdot \frac{\Delta R}{R} \tag{4.32}$$

As can be seen in Eq. (4.32) the signal to noise ratio is dependent on a fixed constant ($1/\sqrt{2k}$) and the square root of the bandwidth (Bw). The bandwidth is normally determined by the requirements of a certain application. Telecommunication applications require for instance a bandwidth of $Bw=3.4kHz$.

The signal to noise ratio is also dependent on the square root of the ratio of the dissipated power P and the mean operating temperature (T). The more power is dissipated the better the S/N, the hotter the resistor the worse the S/N gets. One can understand that the ratio P/T is a important figure for the Microflown. After all the Microflown is a thermal sensor, so it needs to be heated to operate. The S/N is linear dependent on last variable, the relative resistance variation: ΔR/R.

Example (1)

If due to P=10mW dissipation a resistor increases 100°C (temperature will become 373K) in temperature and one wants to monitor variations from DC up to 1kHz. How large variations can be measured? Use Eq. (4.32).

$$\begin{aligned}\frac{S}{N} &= \frac{1}{\sqrt{4 \times 1.38 \cdot 10^{-23}}} \cdot \frac{1}{\sqrt{1k[Hz]}} \cdot \sqrt{\frac{0.01[W]}{373[K]}} \cdot \frac{\Delta R}{R} \\ &= 21.5 \cdot 10^{6} \cdot \frac{\Delta R}{R}\end{aligned} \tag{4.33}$$

The signal to noise ratio should be larger than unity, so a relative resistance variations larger than $\Delta R/R=50 \cdot 10^{-9}$ should be detectable.

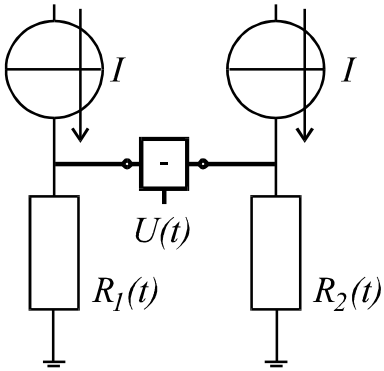

Fig. 4.3: Measuring a differential resistance variation.

The output of the Microflown is a differential resistance variation. So in stead of one varying resistor, the resistor difference of two sensors is observed. The signal to noise ratio of a differential resistor variation is slightly different than the S/N of one varying resistor. It can be measured with the electrical circuit shown in Fig. 4.3.

For a nominal value $R_1=R_2=R$ the output signal for differential resistance variations equals:

$$U(t) = U + \Delta U = IR_1(1+\frac{\Delta R_1}{R_1}) - IR_2(1+\frac{\Delta R_2}{R_2}) = 2IR\frac{\Delta R}{R} \tag{4.34}$$

The common resistance variations are suppressed. The relative differential resistance variation $\Delta R/R$ is defined as:

$$\frac{\Delta R}{R} = \frac{R_1(t) - R_2(t)}{R} \tag{4.35}$$

The signal to noise ratio of this circuit is given by:

$$\frac{S}{N} = \frac{2IR\frac{\Delta R}{R}}{\sqrt{4kTR_1Bw + 4kTR_2Bw}} = \frac{1}{\sqrt{4k}} \cdot \frac{1}{\sqrt{Bw}} \cdot \sqrt{\frac{2P}{T}} \cdot \frac{\Delta R}{R} \tag{4.36}$$

Where $2P$ is the total power dissipation in the Microflown (so the dissipation in both wires).

The signal to noise ratio of differential varying resistors is dependent on the power dissipated in the resistors and the temperature of the resistors, not of the resistor value itself.

The noise output of a Microflown is depicted in Fig. 4.4. As can be observed, 1/f noise is dominant for frequencies below 3kHz. The origin of the 1/f noise is not investigated yet, so it is not clear if is caused by the Microflown or the preamplifier.

The name "1/f' refers to the dominant 1/f behaviour in the power spectrum of the noise. Because the noise output voltage is depicted in Fig. 4.4, the 1/f noise has a decay of 10dB per decade.

Example (2)

The noise spectrum of a Microflown is determined. The non-packaged sensitivity of a Microflown is ΔR/R=0.12‰ (re. 1Pa*=94dB PVL), the Microflown is packaged in a standard ½" housing of which the package gain is 9-12dB, see Fig. 13 chapter A, so the sensitivity with packaging is ΔR/R=0.4‰ (re. 1Pa*=94dB PVL). The power dissipation was 35mW and the operation temperature was estimated 600K. So the signal to noise ratio (94dB sound level and noise in 1Hz bandwidth) at lower frequencies and without 1/f noise would be 112dB, see Eq. (4.36).

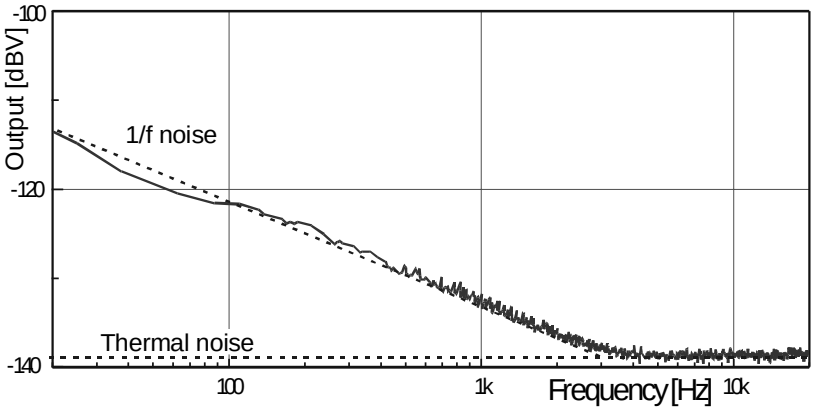

Fig. 4.4: Measurement of the noise output of an amplified Microflown. As can be seen 1/f noise is dominant for frequencies lower than 3kHz (Low frequency sensitivity is 35mV/Pa*). The dotted line represents the theoretical 1/f noise.

The low frequency sensitivity of the Microflown with preamplifier that is used for the noise measurement was 35mV/Pa*. This means that the output of the Microflown plus preamplifier at 1Pa* (=94dB PVL) is 35mV, which equals –29dBV. The thermal noise level, the noise spectrum without 1/f noise, is measured –139dBV/√Hz. So the signal to noise ratio, without 1/f noise, is 110dB which is in good agreement with Eq. (4.36).

At least 1dB in signal to noise is lost due to the preamplifier. It is not clear yet where the 1/f noise is generated: it can be in the Microflown, the preamplifier of the Microflown or in the preamplifier of the analyser that was used.

Preamplifier for the Microflown

The Microflown can be powered in several modes, the constant voltage mode (CV) and the constant current (CC) mode will be presented here. (Constant temperature and constant temperature difference is also possible). Several circuits will be examined. The noise behaviour is one of the most important properties. The circuit should not add noise to the signal or in other words the signal to noise ratio (S/N) as given in Eq. (4.36) should be not decreased by the use of a preamplifier.

Other important quantities are the complexity, the number of (large/expensive) components, stability (drift/oscillations) of the circuit, the dynamic rage (the ratio between the maximal and minimal signal), the common mode rejection ratio (CMRR) i.e. the ability to discriminate between the differential output of the Microflown (the signal) and the common output of the Microflown. The power supply rejection ratio quantifies the transfer rate from the power supply to the output. This figure should be as high as possible.

Regarding the connectivity several connectors and voltage levels have become standard in acoustics. One example is the 7-pins LEMO connector. Another (unofficial) way of powering microphones is the ICP standard. The powering module is generating a 4mA DC current and the output voltage of the microphone is used for the signal transfer. It is a two-wire protocol that makes use of BNC connectors.

In professional audio, the so-called Phantom powering has become standard. It is specified as 48 volts provided through two 6.8kΩ resistors. The signal is a differential voltage over the two resistors, see chapter DII *“Add-on Microflown for a high end pressure gradient microphone”*.

The Gadget

The Gadget is a simple preamplifier that has good noise properties and a high dynamic range, see Fig. 4.5. It is basically a Widlar current mirror [1], the output current is a function of the input current and the emitter resistors R1 & R2. If these resistors have the same value the output current will be approximately the same as the input current.

The base and the collector of transistor T1 are short-circuited. It acts therefore as a diode. Because of the current source,the voltage over this diode is independent of resistor variations (the variation in the base current of transistor T2 is considered very small). Transistor T1 can be seen as a voltage source U_D, see Fig. 4.5B.

Both resistors vary a little, as described by Eq. (4.28).

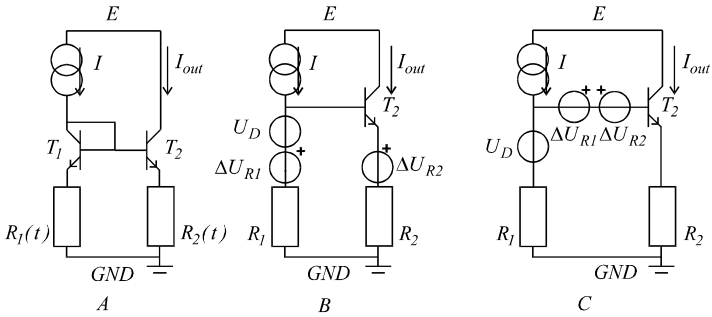

Fig. 4.5A: The Basic Gadget, B and C: the functionality simply explained.

When a constant current is applied to $R_1(t)$, a varying voltage, $\Delta U_{R1}=I\cdot\Delta R$, will arise, see Fig. 4.5B. A variation in resistor $R_2(t)$ will cause a variation in the emitter current of T_2, which can be seen as a varying current source parallel to R_2, the Norton equivalent of a (Thévenin [1]) voltage source in series with a resistor, see Fig. 4.5B. This voltage source can be split (Blakesley [1]), one in series with the base and the other one in series with the collector. This last voltage source can be neglected because of the high impedance of the collector output.

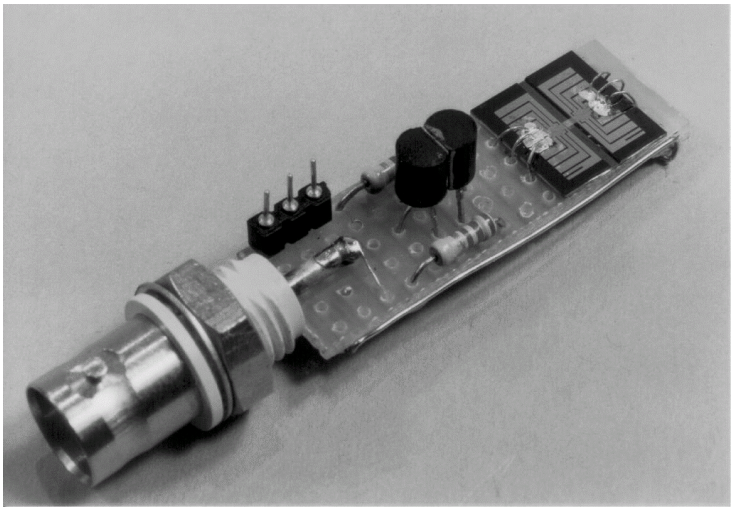

Fig. 4.6: First realisation of the gadget (two resistors and two transistors) including the first type of Microflown (Pedro Roodenburg, 1994).

At the base of T_2 the two voltage sources ΔU_{R1} and ΔU_{R2} are in opposite orientation and can be replaced by: $\Delta U_{R1}-\Delta U_{R2}=I(\Delta R_1-\Delta R_2)=2I\Delta R=2I\Delta R$. The output current increase ΔI_{out} due to a base voltage increase $V_{base,T2}=2I\Delta R$ will be approximately $\Delta I_{out}\approx V_{base,T2}/R_2$. And the transfer function will be $\Delta I_{out}\approx 2I\Delta R/R$.

In its most simple form the current source is implemented with resistor R_3 and the output current is converted to an output voltage with resistor R_4, see Fig. 4.7.

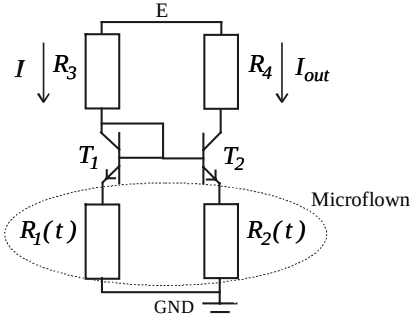

Fig. 4.7: The Gadget.

The DC bias condition of *The Gadget* (see Fig. 4.7): $R_3 \geq R_4$. The transfer function of *The Gadget* is then given by:

$$\Delta u_{out} = -2IR_4 \frac{\Delta R}{R} = -2 \cdot \frac{(E - U_{BE1})}{R_3 + R} \cdot R_4 \frac{\Delta R}{R} \tag{4.37}$$

If the value of R_4 equals R_3, a maximal voltage gain for *The Gadget* can be achieved. The common mode ($\Delta R_1 = \Delta R_2$) transfer function is given by:

$$\Delta u_{out,common} = \frac{I \cdot R \cdot R_4}{R_3} \frac{\Delta R}{R} \tag{4.38}$$

The combination of the later provides the common mode rejection ratio CMRR:

$$CMRR = \left| \frac{\Delta u_{out,diff.}}{\Delta u_{out,common}} \right| \approx 2 \frac{R_3}{R} \tag{4.39}$$

If the power supply increases by ΔE (see Fig. 4.7), the current through R_3 will increase with $\Delta I = \Delta E/(R_3+R)$ and consequently the current through R_4 will also increase by ΔI. The output voltage alters with ΔE minus $\Delta I \cdot R_4$, which leads to a power supply rejection ratio (PSRR) of:

$$\frac{\Delta E}{\Delta U_{out}} \approx \left(1 - \frac{R_4}{R_3 + R}\right)^{-1} \tag{4.40}$$

If $R_4 \approx R_3 + R$ the effects of variations in the power supply will be minimised.

Noise of the Gadget

The analysis of the noise contribution of the Gadget is given in [2]. The minimal noise contribution can be found if the following equation yields:

$$R_{optimal} \approx \frac{U_T^2 \cdot \alpha_{FE}}{2P} \Leftrightarrow \alpha_{FE\,optimal} \approx 2\left(\frac{U_R}{U_T}\right)^2 \Leftrightarrow I_{opt.} = \frac{U_T}{R}\sqrt{\alpha_{FE}} \tag{4.41}$$

Mathematical noise calculations are very time consuming. Therefore normally a PSPICE simulation is used to find the noise contribution of the several electrical elements.

Example (3)

As an example, the results of a PSPICE simulation will be presented. The resistors of the Microflown are simulated as voltage controlled current sources, the transfer function is displayed above the models. (A resistor is in fact a voltage controlled current source: I=U/R). A nominal sensor resistance of $R=1k\Omega$ is chosen for this example. With the voltage source *Vinput* the value of the sensor resistance is varied. *Vinput* equals 0.5V and the differential resistor variation: $\Delta R/R=1‰$. Because of the differential resistor variation the simulated output voltage equals $\Delta U_{s,d}=43.6mV$. In theory, Eq. (4.37), this value equals $\Delta U_{th,d}=44.8mV$. The simulated values are in quite good agreement with the theory.

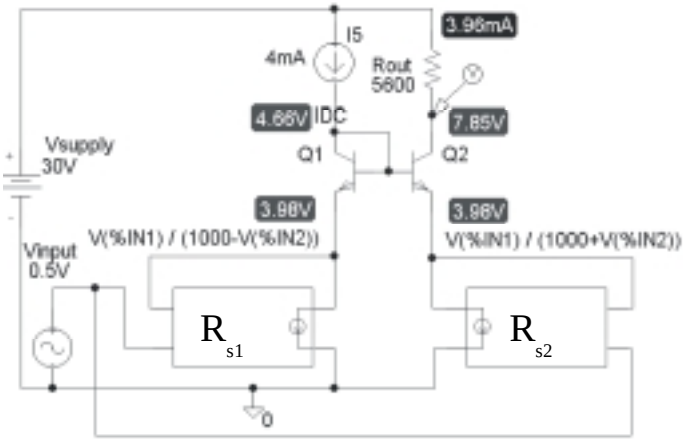

Fig. 4.8: Graphical input of PSPICE simulation.

As expected, the output due to a common resistor variation of 1‰ is according the simulation small: 25.5µV (CMRR=65dB). If the current source is replaced by a resistor with a value of $R_{in}=6.8k\Omega$, the bias current will still be 4mA and the differential resistor variation will decrease to $\Delta U_{s,d}=41mV$ and the output due to a common resistor

variation is rising to $\Delta U_{s,c}=2.9mV$ (CMRR=23dB). According the theory the value should be $\Delta U_{s,c}=3.3mV$.

R_{s1} and R_{s2} being the resistors of the Microflown. The noise output can be simulated if the voltage controlled current sources (the model of the Microflown) are replaced by resistors of 1kΩ. In this version of PSPICE the temperature of the resistors can not be altered. Since the absolute temperature of the sensors is roughly twice as high as the ambient temperature, the noise contribution of the resistors Rs1 and Rs2 should be √2 higher. As can be seen in the table below, the noise of the resistors is thus just dominating over the noise contribution of Q2.

f=1kHz, $V^2/\sqrt{Hz}$						
Q1	Q2	Rin	Rout	Rs1	Rs2	$\delta V^2_{out\ tot}$
5.0E-18	7.9E-16	5.6E-17	9.2E-17	3.8E-16	5.0E-16	1.8E-15

The signal to noise ratio (in 1Hz bandwidth) is $20\mathrm{Log}_{10}(\Delta U_{s,d}/\delta V_{out})$ $=20\mathrm{Log}_{10}(41mV/42nV)=120dB$. The sensor resistors where simulated at room temperature. The dissipated power was $P=I^2R=16mW$. According to theory Eq. (4.36) the signal to noise ratio with a 1Hz bandwidth and with $\Delta R/R=1‰$ should be 123dB.

The signal to noise ratio of the Microflown plus preamplifier is 3dB worse than the naked Microflown. The S/N is not optimal due to the fact that the bias current is much larger than the optimal bias current given in Eq. (4.41). It should be in the order of $I_{opt}=350\mu A$. The noise performance of the circuit therefore is not optimal.

Constant voltage circuits

CE gadget

Another circuit that has been frequently used is the common emitter CE configuration [2]. The Microflown is configured as one half of a Wheatstone bridge, see Fig. 4.9. The transfer function is defined as:

$$V_{base} = \frac{R_{0,2}+\Delta R_2}{R_{0,2}+\Delta R_2+R_{0,1}+\Delta R_1}E = \tfrac{1}{2}E + \tfrac{1}{2}E\frac{\Delta R}{R} = \tfrac{1}{2}E + IR\frac{\Delta R}{R} \quad (4.42)$$

Since for small signal behaviour both sensor resistances are situated parallel (the equivalent input resistance is therefore $\frac{1}{2}R_0$) the generated noise at the base will be:

$$\delta u_{base} = \sqrt{2kTRBw} \tag{4.43}$$

The varying input voltage of the BJT transistor V_{base} is called signal and consequently the signal to noise ratio of the half Wheatstone bridge is the same as Eq. (4.36) and therefore optimal. The DC base voltage V_{base} is at the half of the supply voltage (E), the bias collector current is given by: $I_C=(V_{base}-U_{BE})/R_E$.

If the emitter capacitor is chosen high enough to short circuit the emitter resistance (R_E becomes zero in Eq. (4.44)) the transfer function of the CE circuit is given by:

$$\frac{V_{out}}{V_{base}} = \frac{sR_C}{sR_E + 1} = sR_c = \frac{kT}{q} I_c R_c = 38.6 \cdot V_{Rc} \tag{4.44}$$

The total transfer function for differential resistor variations is then given by, see Eq. (4.42):

$$V_{out} = 38.6 \cdot \tfrac{1}{2} \cdot E \cdot I_c R_c \frac{\Delta R}{R} = 19.3 \cdot E \cdot V_{Rc} \frac{\Delta R}{R} \tag{4.45}$$

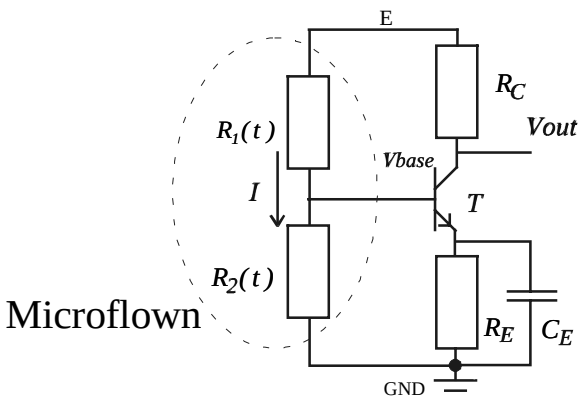

Fig. 4.9: CE configuration with a half Wheatstone bridge as input.

The noise contribution of the CE configuration will be minimal if the optimal bias current is chosen [2]:

$$I_{C,opt.} = U_T \frac{\sqrt{\alpha_{fe}}}{\frac{1}{2} R_{\mu flown} + r_{bb'}} \tag{4.46}$$

If the base series resistance ($r_{bb'}$) is chosen much smaller than the nominal (hot) resistance of the Microflown the circuit will not significantly add noise and the signal to noise ratio will remain at the optimal value as stated in Eq. (4.36). A disadvantage is the low PSRR. A stable, low noise power supply (for example a battery) is therefore advisable.

Example (4)

The CE Gadget is simulated with PSPICE. The simulated output voltage due to 1‰ differential resistor variation is $\Delta U_{s,d}=323mV$. According to theory, Eq. (4.45) the value should be $\Delta U_{th,d}=361mV$. Values are in good agreement. The output due to a 1‰ common resistor variation is very small: $\Delta U_{s,d}=1\mu V$ (CMRR=107dB).

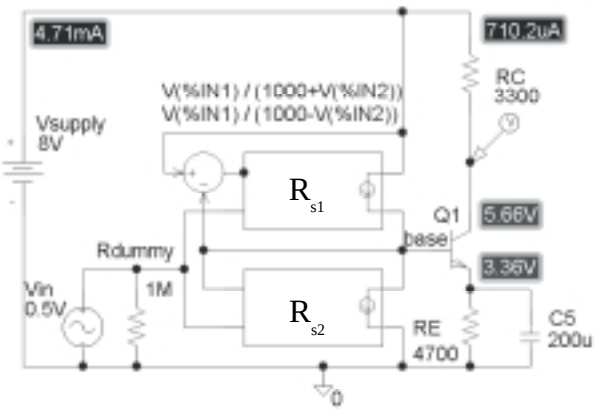

Fig. 4.10: Graphical input of PSPICE simulation.

The noise figures of the CE circuit are:

f=1kHz, $V^2/\sqrt{Hz}$						
Q1	R_C	R_E	Rout	Rs1	Rs2	$\delta V^2_{out\ tot}$
6.1E-15	5.1E-17	1.5E-20	9.2E-17	2.7E-14	2.7E-14	6E-14

R_{s1} and R_{s2} being the resistors of the Microflown. The signal to noise ratio (in 1Hz bandwidth) is $20\text{Log}_{10}(\Delta U_{s,d}/\delta V_{out})= 20\text{Log}_{10}(323mV/245nV) = 122dB$. The sensor resistors where simulated at room temperature. The dissipated power was $P=I^2R=16mW$. According to the theory Eq. (4.36) the signal to noise ratio in 1Hz bandwidth and with $\Delta R/R=1‰$ should be 123dB.

In the previous example (the Gadget) the optimal bias current could not be chosen. The current though the sensor resistors and the bias current of the preamplifier can be chosen independently now. The S/N of the CE preamplifier is in this case 2dB better than the S/N of the Gadget.

Two wire electronics

Easy connectivity and low cost are the main reasons for the two-wire system. A standard BNC cable is used for the readout and powering of the preamplifier plus Microflown.

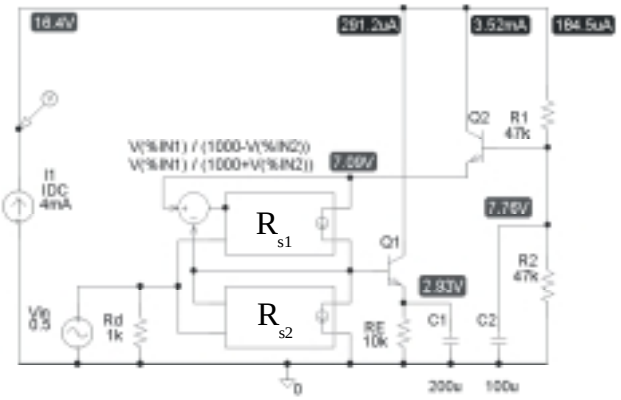

Fig. 4.11: Graphical input of PSPICE simulation.

The powering unit, a current source of normally 4mA[2], will drive the preamplifier. To get a satisfying result, the preamplifier has to transduce the differential resistance variation of the Microflown into "normal" resistance variations. If so, the constant current of the powering unit and the varying resistance of the output of the preamplifier will result in a varying output voltage, proportional to the differential resistance variation of the Microflown.

4mA ICP Preamplifier

One simple circuit will be presented here, it is based on the CE-gadget. The actual realisation is depicted in Fig. 4.11. The input current is used mostly to power the sensor resistors (3.52mA). A small part is used to create a constant voltage supply (184.5µA). The voltage is kept at constant value due to capacitor C2. The bias current of the amplifying part is 291.2µA.

R_{s1} and R_{s2} being the Microflown's resistances. The simulated output voltage due to 1‰ differential resistor variation is $\Delta U_{s,d}=1.45V$. The output due to a 1‰ common resistor variation is: $\Delta U_{s,d}=126mV$ (CMRR=21dB).

The noise figures of the 4mA CV ICP Preamplifier are given in the table below:

f=1kHz, $V^2/\sqrt{Hz}$							
Q1	Q2	R_E	R1	R2	Rs1	Rs2	$\delta V^2_{out\ tot}$
1.8E-13	2.1E-14	1.8E-19	4.9E-16	4.4E-20	5.6E-13	8.2E-13	1.6E-12

The signal to noise ratio (in 1Hz bandwidth) is $20\text{Log}_{10}(\Delta U_{s,d}/\delta V_{out})$ $=20\text{Log}_{10}(1.45V/1.26\mu V)=121dB$. The sensor resistors where simulated at room temperature. The dissipated power was $P=I^2R=12.5mW$. According theory Eq. (4.36) the signal to noise ratio in 1Hz bandwidth and with $\Delta R/R=1‰$ should be 122dB.

[2] The constant current of 4mA is a standard ICP value. The maximum voltage is 28 Volt. ICP is a registered trademark of PCB Piezotronics, Inc. (B&K has a similar system under the name CCLD (Constant Current Line Drive).

The major disadvantage of this implementation is the poor linearity. An extra emitter resistance can improve the linearity, see also "Example (7)". Furthermore two large capacitors need to be used. Since the sensor resistors are relatively low and for a noise perspective placed parallel, the transistors have to be low noise. In short: this circuit needs much expensive components and has a poor linearity. Good noise properties can be achieved if the proper transistors and capacitors are chosen.

Comparing the preamplifiers

The three preamplifiers that are presented have been build and used many times. The noise performance is one of the most important quantities. If the optimal bias current is chosen both ICP as the CE circuits can have an optimal noise performance. One of the benefits of the CE preamplifier is the fact that the bias current can be chosen freely (regarding noise properties the optimal bias current is given by Eq. (4.46). The Gadget is used mostly for research purposes. With this circuit, it is quite easy to measure all the electrical properties of the Microflown.

The dynamic range of the Gadget is higher than the CE gadget. This is due to the high voltage gain of the CE gadget. One could temper the gain by using an extra emitter resistance. This resistance should not be short-circuited by a capacitor. The gain can be calculated with Eq. (4.44).

The Gadget needs a relatively high power supply voltage, has a good power supply rejection ratio (PSRR) and linearity but when the (input) current source is implemented with a resistor the common mode rejection ratio (CMRR) is not very high. To improve the CMRR a current source can be used as input, but this will make the circuit more complex.

The CE Gadget needs a low power supply voltage and has a high CMRR but a low linearity and PSRR. The CE-Gadget is mostly used in battery powered applications. The power dissipation of the amplifying part is small compared to the power dissipation of the Microflown and the supply voltage can be chosen much smaller than when using the Gadget. The linearity (dynamic range) can be improved if needed with an additional emitter resistance.

A note of caution with using the Gadget (Fig. 4.7) is that if resistor R_{s1} is disconnected (for example due to a failing connector) the other resistor R_{s2} has a chance to be destroyed. This is because the base of T_2 will be connected to the positive power supply by means of resistor R_3. The

current will therefore increase to a maximum of $I_{max} \approx E/(R_o+R_{s2})$. It is therefore advisable to choose the output resistance about 5% to 10% smaller than R_4.

The CV-ICP preamplifier is in fact a modification of the CE-Gadget. The powering and readout accomplished by two wires. The connector can be kept very simple but the prize is that the CMRR of this circuit is less good. If the ICP-4mA preamplifier is used the power dissipation of the Microflown will be less than 50mW and the total power dissipation equals 27V×4mA=108mW.

	Gadget	CE-gadget	CV-ICP
S/N	+	++	++
Simplicity	++	+	+-
CMRR	+-	++	+-
PSRR	++	--	+-
Dynamic range	++	+-	+-
Power dissipation	-	++	+
Use	Laboratory	Battery powered applications	Current Powering

Characteristics of a Microflown

The operating temperature of the Microflown is depending on the power dissipation. The sensitivity and corner frequency are temperature dependent. It is convenient to express all quantities as a function of power dissipation. In this way various Microflowns can be compared to each other. Quantities as selfnoise, signals to noise ratio, Performance and Noisefactor can be calculated form those figures (see next paragraph). The Gadget showed to be most effective for these measurements (see Fig. 4.7): the power supply voltage E is varied and power dissipation and sensor resistance can be calculated in a simple manner.

Measurements

The sensors of the Microflown are resistive temperature sensors normally made of platinum. If one measures the voltage over and the current through the sensor one is able to calculate the dissipated power and the resistance. If this measurement is repeated for several values a curve can be drawn of the resistance of the sensors as function of the dissipated power. Once the linear coefficient of resistivity is measured a resistance value can be converted to a temperature. Now the temperature of the sensors is known as function of the dissipated power. This measurement is known as the Power Curve (P.C.).

The electrical output of a preamplifier plus the Microflown is also measured as function of the dissipated power in the Microflown. With the transfer function of the preamplifier taking into consideration the sensitivity of the Microflown curve can be measured. This measurement is known as the Sensitivity Curve (S.C.).

The Power Curve

The Power Curve is used to measure the average temperature of the sensors as a function of the dissipated power. If the first order temperature coefficient of resistivity is known the operating temperature can be calculated by using the following equation:

$$\frac{R - R(P)}{R} = \alpha\,(T_{ambient} - T_{heated}) \tag{4.47}$$

One typical measurement is shown in Fig. 4.12.

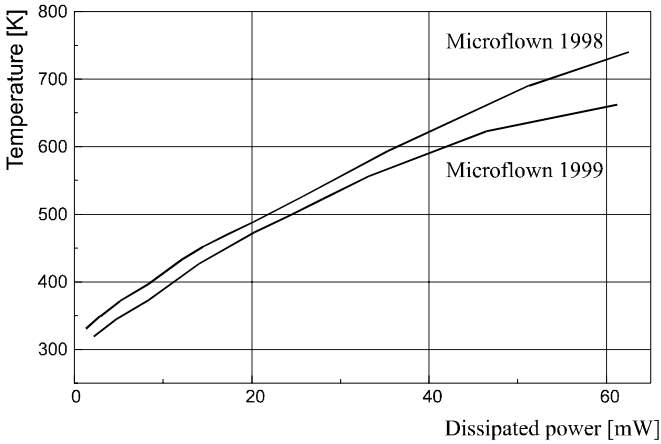

Fig. 4.12: The Power Curve: the operating temperature as function of the total dissipated power.

The temperature of the sensors is (among others) dependent on the thermal conductivity of air which is temperature dependent. The temperature of the sensors is therefore not linear related to the dissipated power.

The platinum sensors of the Microflown can be heated until they are brightly glowing. The measurement is stopped if the Microflown just starts to glow: the maximal sensor temperature is then about 900K. The sensor operating (or average) temperature is lower than the maximal sensor temperature since the temperature profile is not constant over the sensor. For noise calculations the sensor operating temperature is used. A Microflown of one millimetre length starts to glow at approximately 70mW of total dissipated power.

The sensitivity Curve

The output of a Microflown is measured in a calibrated acoustic measurement set up at a low frequency (around the 250Hz) for several values of the dissipated power. As can be seen in Fig. 4.13 the sensitivity has been improved over the years.

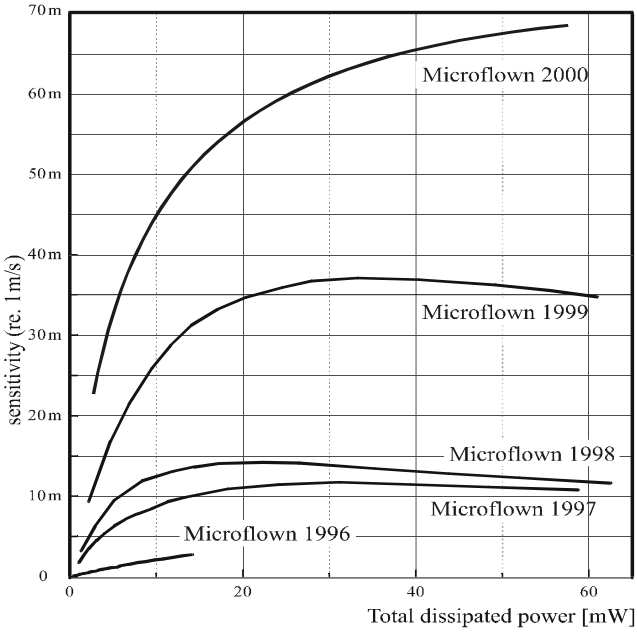

Fig. 4.13: The sensitivity (ΔR/R) of the various (non-packaged) Microflowns as function of the total dissipated power calculated to 1m/s particle velocity.

The first Microflown 1996 (see Fig. 4.6) was made of gold in stead of platinum. Because of the low melting temperature of gold (700K) it could not be heated up to very high temperatures, the power dissipation therefore was limited to 15mW. The noise properties were not optimal since the sensor resistances were very low (in the order of 30Ω).

The Microflown that was used in 1997 was a cantilever type, see Fig 2.15. At that time we thought that it would be better that the sensors were free in the air (we did not know about package gain at that time). It was made of platinum so the operating temperature (and thus the power dissipation) could be higher.

The Microflown that was used in 1998 was again (like the first Microflown) a bridge type. Due to the discovery of the package gain, the cantilever concept was abandoned. The cantilevers needed a relative thick silicon nitride supporting layer, the corner frequency was therefore limited to 300Hz. Due to the bridge configuration the 1998 type of Microflown could be made thinner and did reach a higher corner frequency.

A new production method made it possible to make sensors without a carrier layer and thus the sensors of the 1999 Microflown was made of platinum only. The corner frequency therefore could rise more and the platinum could be made with less contaminations which lead to a higher temperature coefficient of resistivity and thus sensitivity.

The 2000 Microflown has a maximal sensitivity of 70‰.

The Corner Frequency Curve

The Microflown has two corner frequencies, one is due to diffusion effects and one due to the heat capacity of the sensors. A frequency response is measured and fitted with two first order responses. The low frequency sensitivity is used to calculate the sensitivity of the Microflown and both corner frequencies are used to fit the calibration measurement.

$$Output = \frac{Low\ \ Frequency\ Sensitivity}{\sqrt{\left(1+\left(\frac{f}{f_{diffusion}}\right)^2\right)\left(1+\left(\frac{f}{f_{heatcapacity}}\right)^2\right)}}$$

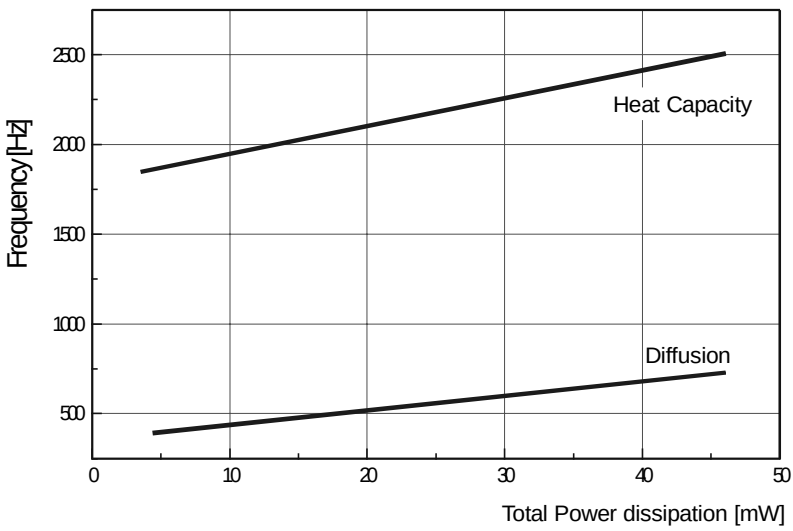

Fig. 4.14: The corner frequency of the 2000 Microflown as function of the total dissipated power. It is also dependent on the total dissipated power.

Quantification of noise properties of the Microflown

For measurement purposes it is convenient to define a signal to noise ratio. The signal is mostly defined as a 94dB free-field sound wave. So the sound pressure is 1Pa and the particle velocity 1Pa*=1Pa/ρc≈2.2mm/s. Noise is measured in a certain bandwidth. For measurement purposes, the most common bandwidths are 3.16Hz bandwidth or 1/3octave both measured at 1kHz, the linear noise level measured in a 20Hz –20kHz bandwidth or 20Hz-200kHz bandwidth. The noise output in 1Hz bandwidth as function of frequency is called the spectral density and is given in Volts per square root Hertz. If the spectral density is known, all above mentioned noise figures can be calculated.

If a microphone is used for audio applications it is custom to use the A-weighed selfnoise. This is the amount of noise that is generated by a microphone in a complete silent environment and is expressed as a sound level.

Noise properties: audio

The selfnoise of the Microflown is one of the most important quantities. Normally, for speech and audio purposes the noise is measured "weighed". This means in this case that frequencies around the 3kHz are amplified and that the higher and lower frequencies are suppressed, see Fig. 2.9. The human ear does the same; frequencies around the 3kHz can be heard best. The "A" weighing curve that compensates for the human ear sensitivity is given in Fig. 4.15.

The formula of the "A" weighing curve is given by:

$$\left|W_A(f)\right| = 1.26 \frac{(12200\, f^2)^2}{(f^2+20.6^2)\,(f^2+12200^2)\,\sqrt{(f^2+107.7^2)}\,\sqrt{(f^2+737.9^2)}} \qquad (4.48)$$

For sound recording purposes the frequency response should be flat. The Microflown has a low pass frequency response that has to be compensated. The transfer function of the compensation circuit is of the form:

$$H(f)_{comp.} = \sqrt{\left(1+\left(\frac{f}{f_{diff}}\right)^2\right)\left(1+\left(\frac{f}{f_{heat\,cap}}\right)^2\right)} \qquad (4.49)$$

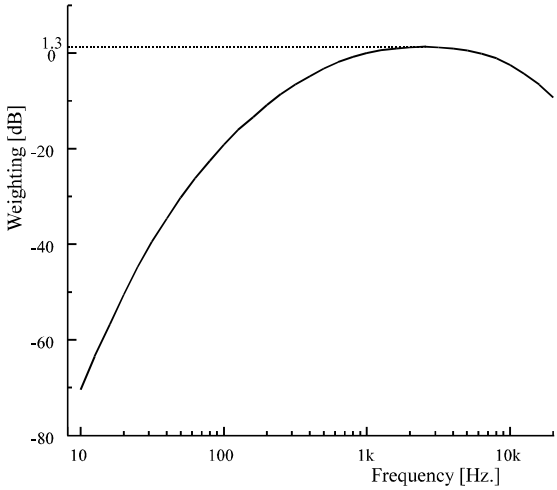

Fig. 4.15: The “A” weighing curve.

The high frequency roll-off that is caused by the time it takes heat to travel from one wire to the other is estimated by a first order low pass behaviour that has a diffusion corner frequency (f_{diff}) in the order of 1kHz. The second high frequency roll-off is caused by the heat capacity (or thermal mass) and shows an exact first order low pass behaviour that has a heat capacity corner frequency ($f_{heat\ cap}$) in the order of 10kHz for modern Microflowns.

The “A”-weighed thermal noise can be described with the following equation:

$$\delta u_A = \sqrt{8kTR \int_{Bw} W_A^2(f) \cdot \left(1+(\frac{f}{f_{diff}})^2\right)\left(1+(\frac{f}{f_{heat\,cap}})^2\right) \cdot df} \qquad (4.50)$$

The output of the Microflown is a differential resistance variation due to a particle velocity sound wave. The sensitivity of a Microflown is given as the differential resistance variation per meter per second or for sound levels of 94dB or 1Pa. The corresponding particle velocity is 2.2mm/s. At these levels the output of a pre-amplified Microflown will be given in mV per Pa* meaning 1Pa*=1Pa/ρc=2.2mm/s.

The “A”-weighed selfnoise of an acoustic sensor is given as the amount of output signal due to the “A”-weighed electrical noise. The electrical output is divided by the sensitivity of the acoustic sensor. So an

acoustic sensor with a selfnoise of 20dB generates an output signal in a complete quiet environment that equals the output of the same sensor subjected to a sound source of 20dB.

The output of a Microflown is given by Eq. (4.34). And therefore the selfnoise is given by:

$$Selfnoise_A = \frac{\sqrt{8kTR}}{2IR\frac{\Delta R}{R}} \sqrt{\int_{Bw} W_A^2(f) \cdot \left(1+(\frac{f}{f_{diff}})^2\right)\left(1+(\frac{f}{f_{heat\,cap}})^2\right) \cdot df} \quad (4.51)$$

The reference particle velocity level is 50nm/s. So to express the selfnoise in dB the selfnoise as expressed in Eq. (4.51) should be divided by the reference particle velocity level: (Eq. (4.52))

$$\begin{aligned} Selfnoise_A &= 20Log_{10}\left\{\frac{\sqrt{2k}}{u_{ref.}\frac{\Delta R}{R}}\sqrt{\frac{T}{P}}\sqrt{\int_{Bw} W_A^2(f) \cdot \left(1+(\frac{f}{f_{diff}})^2\right)\left(1+(\frac{f}{f_{heat\,cap}})^2\right) \cdot df}\right\} \\ &= \underbrace{10Log_{10}\left\{\int_{Bw} W_A^2(f) \cdot \left(1+(\frac{f}{f_{diff}})^2\right)\left(1+(\frac{f}{f_{heat\,cap}})^2\right) \cdot df\right\}}_{Noisefactor} \underbrace{-20Log_{10}\left\{\frac{u_{ref.}}{\sqrt{2k}} \times \sqrt{\frac{2P}{T}} \times \frac{\Delta R}{R}\right\}}_{Performance} \end{aligned}$$

It will be convenient to split the selfnoise into the Noisefactor and the Performance of a Microflown. It is quite a work to calculate the noise factor therefore some practical values are plotted in Fig. 4.16.

For noise calculations the following equations are convenient to know:

$$\sqrt{\int_{10Hz}^{100kHz} |W_A|^2 df} = 116 \quad ; \quad 20\log_{10}\sqrt{\int_{10Hz}^{100kHz} |W_A|^2 df} = 41.3$$

$$\sqrt{\int_{10Hz}^{3.4kHz} |W_A|^2 df} = 59.5 \quad ; \quad 20\log_{10}\sqrt{\int_{10Hz}^{3.4kHz} |W_A|^2 df} = 35.5$$

The Performance shows quite some similarity with the signal to noise ratio expression as shown in Eq. (4.36).

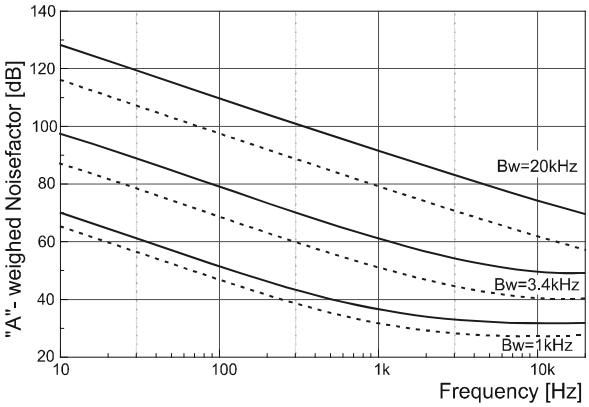

Fig. 4.16: The ("A"-weighed) noise factor as function of the bandwidth (*Bw*) and heat capacity corner frequency (f_c). The solid lines represent the noise factor for a diffusion corner frequency f_{diff}=500Hz, the dotted lines represent the noise factor for a diffusion corner frequency f_{diff}=2kHz.

Noise properties: measurement

Normally, for measurement purposes the noise is not A-weighed so noise properties are easier to calculate. The signal of the Microflown is not corrected so the noise that is generated by the Microflown is supposed to be white (not a function of the frequency) and the signal will drop 6dB/oct due to the diffusion corner frequency (f_{diff} is about 700Hz) and drop 6dB/oct due to the heat capacity corner frequency ($f_{heat\ cap}$ is about 2kHz).

If the Microflown is operating in a constant voltage mode, the signal for low frequencies is given by Eq. (4.42). If the low pass behaviour is taken into account, the expression will become:

$$\Delta V = \frac{IR}{\sqrt{\left(1+(\frac{f}{f_{diff}})^2\right)\left(1+(\frac{f}{f_{heat\,cap}})^2\right)}}\frac{\Delta R}{R} \tag{4.53}$$

The noise that is generated by the sensors of the Microflown is white (1/f noise is not considered here) and given by Eq. (4.43) for a constant voltage mode. If a spectrum (output signal as function of the frequency) is measured, the frequency axis is divided in a number of spectral lines.

One is free to choose the bandwidth of these spectral lines. If the bandwidth of the spectral lines is very limited, one needs a lot of lines to cover a certain frequency span and the measurement will take longer. The bandwidth (*Bw*) of one spectral line is given by f_{max}-f_{min}. The signal to noise ratio is given by:

$$\frac{S}{N} = \frac{1}{\sqrt{4k}} \frac{1}{\sqrt{Bw}} \frac{\sqrt{\frac{2P}{T}} \frac{\Delta R}{R}}{\sqrt{\left(1+(\frac{f}{f_{diff}})^2\right)\left(1+(\frac{f}{f_{heat\,cap}})^2\right)\left(1+(\frac{f_{1/\,fnoie}}{f})\right)}} \quad (4.54)$$

In this model the 1/f noise is taken into account. Preliminary measurements show that the 1/f noise corner frequency is in the order of 3kHz.

Example (5) Sound Measurement

For measurement purposes a Microflown is used that is packaged, the gain is 10dB. The heat capacity corner frequency of the Microflown at 40mW is 2kHz, and the diffusion corner frequency 700Hz. The (2000) Microflown is powered with 40mW and the sound level that should be measured is 62dB PVL in 2.5Hz bandwidth. The 1/f noise corner frequency is 3kHz. What is the signal to noise ratio?

At 40mW the operating temperature is 600K, see Fig. 4.12. The sensitivity of a non-packaged (1999) Microflown at 40mW is 37‰, see Fig. 4.13. So packaged the sensitivity will increase 10dB (3 times) to 111‰. The sensitivity is given for a particle velocity of 1m/s (this is 146dB PVL). At 62dB the sensitivity will be reduced (146-62=) 84dB (16,000 times) to $\Delta R/R_{62dB}$=210‰/16,000=$7\cdot10^{-6}$.

$$\frac{S}{N} = \frac{1}{\sqrt{4k}} \frac{1}{\sqrt{Bw}} \sqrt{\frac{1}{\left(1+(\frac{f}{f_{diff}})^2\right)\left(1+(\frac{f}{f_{heat\ cap}})^2\right)}} \sqrt{\frac{P}{T}} \frac{\Delta R}{R}$$

$$= \frac{1}{\sqrt{4\times1.38\cdot10^{-23}}} \frac{1}{\sqrt{2.5}} \sqrt{\frac{1}{(1+\frac{15k^2}{700^2})(1+\frac{15k^2}{2k^2})(1+\frac{3k}{15k})}} \sqrt{\frac{40\cdot10^{-3}}{600}} 7\cdot10^{-6}$$

$$= 30$$

So the signal to noise ratio is 30 times, or 29dB. If the bandwidth is altered in 1Hz, the signal to noise ratio will increase 20Log√2.5=4dB.

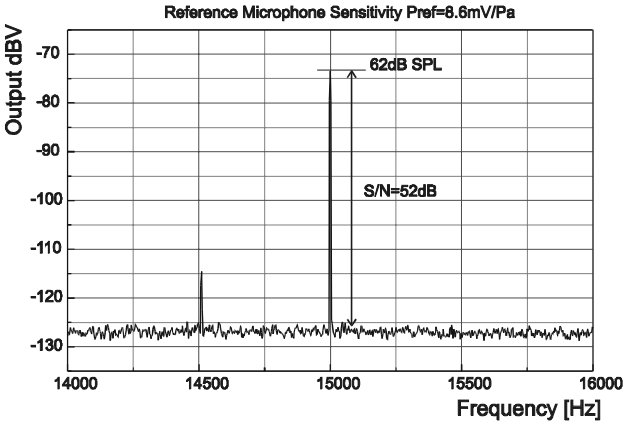

Fig. 4.17: Under anechoic conditions a (pure sine) tone of 15kHz was measured by a ½" reference pressure microphone.

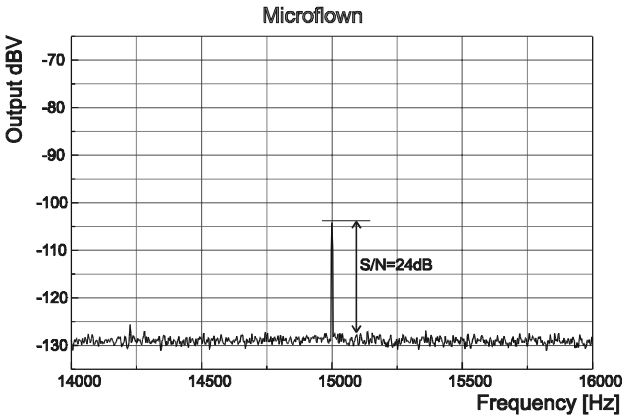

Fig. 4.18: Under anechoic conditions a (pure sine) tone of 15kHz was measured by a ½" ICP probe.

Measurements that are depicted in Fig. 4.18 are showing a pure sine tone of 15kHz of 62dB SPL under anechoic conditions. The ½" pressure microphone has at these frequencies a measured signal to noise of 52dB. The ½" ICP Microflown (see chapter AI "*The half-inch Microflown, electronics and performance*") has a measured signal to noise ratio of 24dB.

Example (6) Influence of the 1/f noise (Audio)

The most used noise figure for audio applications is the "A" weighed noise level. This means that frequencies around the 3kHz are amplified and that the higher and lower frequencies are suppressed, see Fig. 4.15.

Due to the influence of 1/f noise, the noise levels at lower frequencies are larger than from thermal noise only (see Eq. (4.31)). *What is the influence of this 1/f noise on the "A" weighed noise level?*

The "A" weighed noise of a without 1/f noise is given by (Eq. (4.51)):

$$Selfnoise_A = \frac{\sqrt{8kTR}}{2IR\frac{\Delta R}{R}} \sqrt{\int_{Bw} W_A^2(f) \cdot \left(1+(\frac{f}{f_{diff}})^2\right)\left(1+(\frac{f}{f_{heat\,cap}})^2\right) \cdot df}$$

If the 1/f noise is included, the thermal noise part will alter into $\sqrt{8kTR(1+f_{1/fnoise}/f)}$ and the influence of the noise should be integrated over the bandwidth. The ratio between the "A" weighed calculated selfnoise with and without 1/f noise is given by:

$$ratio: \frac{\sqrt{\int_{Bw} W_A^2(f)(1+f_{1/f\,noise}/f)\left(1+(\frac{f}{f_{diff}})^2\right)\left(1+(\frac{f}{f_{heat\,cap}})^2\right) \cdot df}}{\sqrt{\int_{Bw} W_A^2(f) \cdot \left(1+(\frac{f}{f_{diff}})^2\right)\left(1+(\frac{f}{f_{heat\,cap}})^2\right) \cdot df}}$$

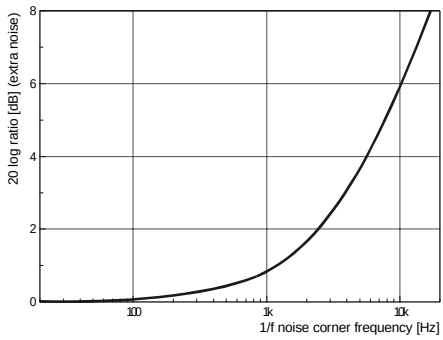

Fig. 4.19: The influence of 1/f noise on the "A" weighed selfnoise: this noise figure increases 2dB due to the presence of 1/f noise with a corner frequency of 3kHz. Below 100Hz the influence is negligible.

Example (7) (Noise-telecom Audio)

To use a Microflown in a telecommunication application the bandwidth should be *Bw*=3.4kHz. If the heat capacity corner frequency of a Microflown is 2kHz and the diffusion corner frequency is 700Hz, the "A" weighted Noisefactor will be about 50dB, see Fig. 4.16.

The sensitivity of a low power Microflown *ΔR/R=37*‰. If it is well packaged the package gain is 15dB (5.5 times). The sensitivity of a packaged Microflown equals therefore *ΔR/R=0.21 s/m*.

Since power dissipation is of concern of the battery powered telecommunication applications the dissipated power should be less than 10mW. The average temperature of the sensors will be 550K. The Performance can be calculated (see Eq. (4.52)):

$$Performance = 20Log_{10}\left\{\frac{u_{ref.}}{\sqrt{4k}} \times \sqrt{\frac{0.01}{550}} \times 0.21\right\} = 15.6dB$$

The selfnoise is given by:

Noisefactor-Performance=50-15.6=34.4dB(A)

For this application a low power preamplifier is necessary that can operate on a battery voltage of 2V. The frequency response of the total system should be flat (±3dB tolerance).

A low-power, low (battery) voltage preamplifier is given in Fig. 4.9. The circuit that is proposed in Fig. 4.20 is a bit different. The emitter resistance is divided in two parts. For high frequencies the capacitor *Ce* is short-cutting *Re2*. The gain of the circuit then is $20\log_{10}(R_c/R_{e1})\approx 22.6$dB. For higher frequencies (f>2kHz) the gain however is tempered with capacitor C_c. For low frequencies both capacitors can be ignored and the gain will be $20\log_{10}(R_c/R_{e1}+R_{e2})\approx 12$dB. Due to the use of Re1 the linearity of this circuit will be improved compared to the CE Gadget (see Fig. 4.9).

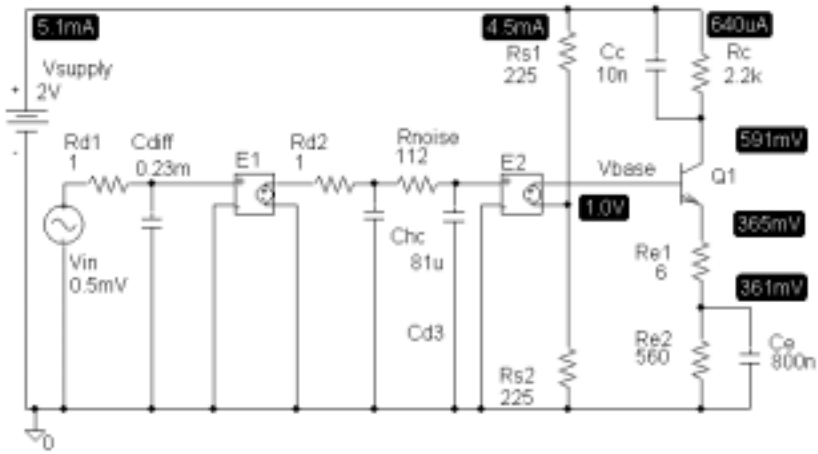

Fig. 4.20: Graphical input of PSPICE simulation: telecom preamplifier.

The sensitivity of the Microflown equals *ΔR/R=0.21s/m*. So for 1m/s the relative differential resistor variation equals 21%. 1m/s corresponds to $20\log_{10}(1/50\cdot10^{-9})$=146dB PVL (*re*. 50nm/s). The sensitivity of pressure microphones is denoted in V/Pa. 1 Pa equals $20\log_{10}(1/20\cdot10^{-6})$=94dB SPL (re. 20μPa).

To be compatible with the standard sensitivity of pressure microphones the output of the Microphone plus preamplifier will be calculated to 94dB PVL.

The relative differential resistor variation at 94dB equals $\Delta R/R=525\cdot10^{-6}$ *s/m*. The output voltage at the base of transistor Q1 can be calculated using Eq. (4.42): V_{base}=0.5mV.

The response of the Microflown is simulated using a voltage source V_{in}=0.5mV, A RC-network (R_dC_{d1}) with a corner frequency of 1kHz to simulate the frequency response, a voltage controlled voltage source to separate the simulated output of it electrical behaviour.

The value of the resistors equals $R=0.5U^2/P=0.5\cdot2^2\cdot/9\cdot10^{-3}=225\Omega$. In the simulation these resistors are at room temperature. To simulate the noise increase due to the higher temperature of the sensor resistances a resistor R_{noise} is added to the circuit. The capacitor C_{d2} is used only for simulation purposes and has no influence on the frequency behaviour in the acoustic bandwidth.

In Fig. 4.21 some results of the simulation are presented. On the first x-axis the gain of the amplifier is displayed. For low frequencies the gain is 11dB. At the same time as the sensitivity of the Microflown drops the gain of the amplifier is rising (up to 18.6dB).

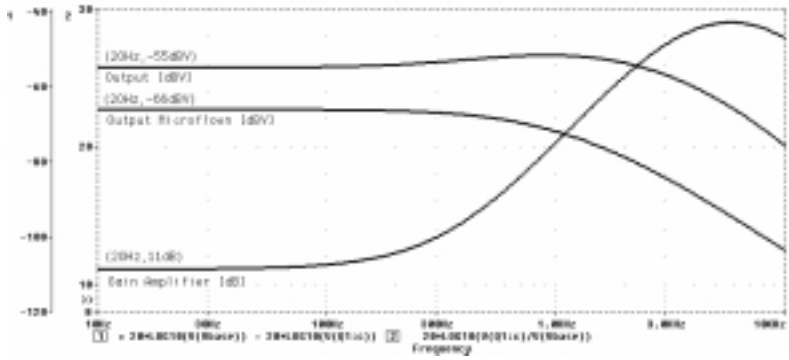

Fig. 4.21: Simulation results of the telecom preamplifier.

On the second x-axis the output is given in dBV (re. 1V). So 1V equals 0dBV, 100mV equals –20dBV and so on. For low frequencies the output of the Microflown equals –66dBV for frequencies above the corner frequency the output is dropping with 6dB/oct. So each time the frequency is doubled, the output decreases 6dB (factor 2). The output of the Microflown plus preamplifier is displayed with the highest line in Fig. 4.21. The transfer function is flat at –55dBV for low frequencies. At 1kHz 2.3dB maximum is found. At 3.3kHz the signal is reduced 3dB.

The simulated noise properties are depicted in Fig. 4.22. The noise contribution of the Microflown is dominant for a frequency above 550 Hz. Below this frequency the noise contribution of Re2 is dominant. For the overall A-weighed noise contribution however noise at lower frequencies does not count much, see Fig. 4.15. The noise contribution of Re1 is quite high.

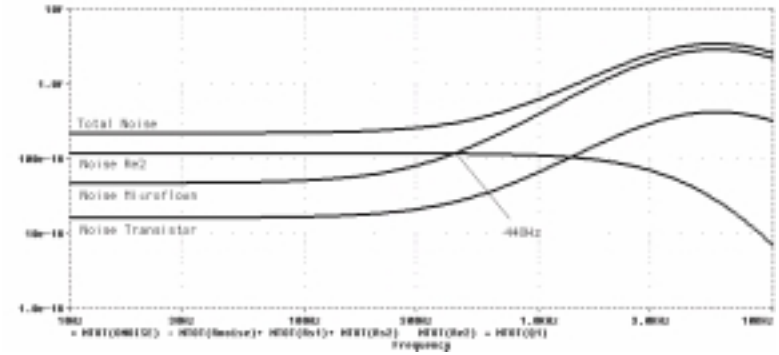

Fig. 4.22: Simulation (noise) results of the telecom preamplifier.

Example (8) (Noise high-end Audio)

A pressure gradient studio microphone has a selfnoise in the order of 20dB(A) and a bandwidth of 16kHz. What must be done to create a Microflown that has the same capabilities?

A Microflown of the year 2000 has at 50mW a sensitivity of 50‰. The operating temperature is 650K at this power dissipation. A packaging can be designed that has a gain of 20dB. In this case the sensitivity increases to 500‰. The Performance of this Microflown is (see Eq. (4.52)):

$$Performance = 20Log_{10}\left\{\frac{50\cdot 10^{-9}}{\sqrt{4\times 1.38\cdot 10^{-23}}}\times\sqrt{\frac{0.05}{650}}\times 0.5\right\} = 29.4dB$$

For a bandwidth of 20kHz and a diffusion corner frequency (f_{diff}) in the order of 1kHz and a heat capacity corner frequency ($f_{heat\ cap}$) of 8kHz the Noisefactor is 70dB, see Fig. 4.16. The “A” weighed selfnoise is thus (at least) 70-29.4=40.6dB.

If ten Microflowns are build in this package, the total power dissipation will increase to 0.5W while the operating temperature of each Microflown will stay on 650K. Due to this, the Performance will increase √10=10dB. So due to this “trick” the selfnoise will drop to 30.6dB. If 100 Microflowns are used the selfnoise would go down to 20dB(A). The Megaflown uses this trick to reduce selfnoise, see further chapter D: “*the audio application*”.

If not hundred Microflowns are put together the last 10dB will be difficult. One could think of several solutions that must be tried to find out if they work. So there are no direct solutions available yet.

The first possibility is to reduce the bandwidth to approximately 5kHz. The Noise factor will reduce due to this. For the highest frequencies a conventional pressure gradient can be used.

Another possibility is to create a new type of Microflown with a sensor material that has a higher temperature sensitivity. Materials like germanium and silicon may be used for this.

The last possibility is to use a constant temperature technique to keep the sensors of the Microflown on a constant temperature. In the anemometry this method is widely used [3]. The heat capacity corner frequency ($f_{heat\ cap}$) will increase due to this and the Noisefactor will drop.

References

[1] Gray and Mayer, Analysis and design of analogue integrated circuits, 1993, New York.

[2] H.-E. de Bree, The Microflown, Ph.D. Thesis 1997, ISBN 9036509262

[3] C.G. Lomas, 'Fundamentals of hot wire anemometry', Cambridge University Press, Cambridge, 1986.